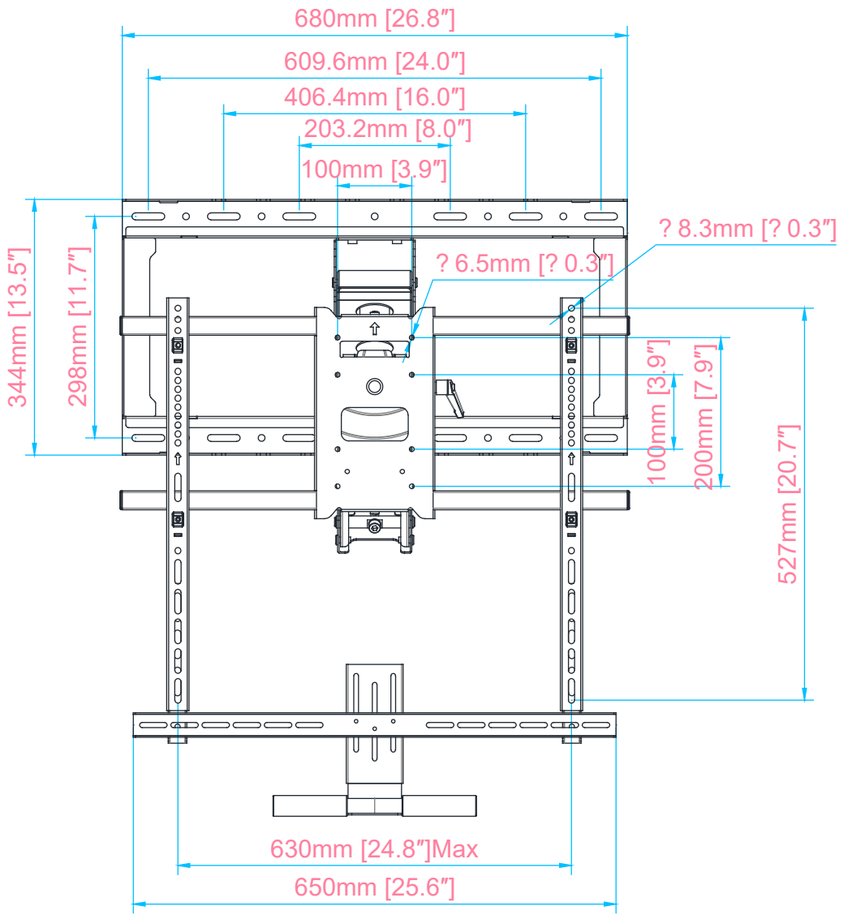

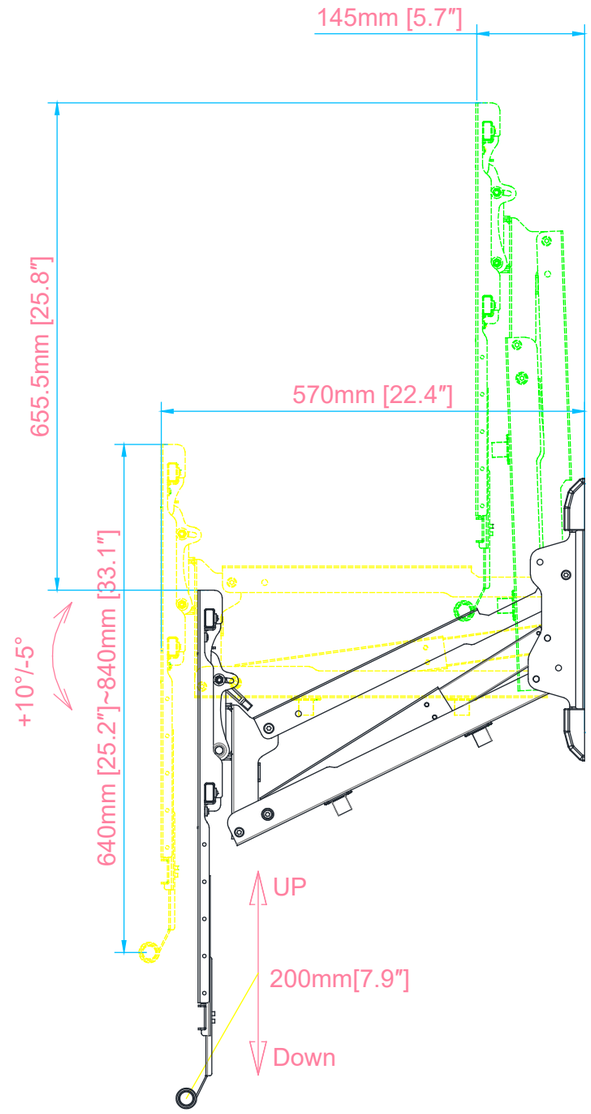

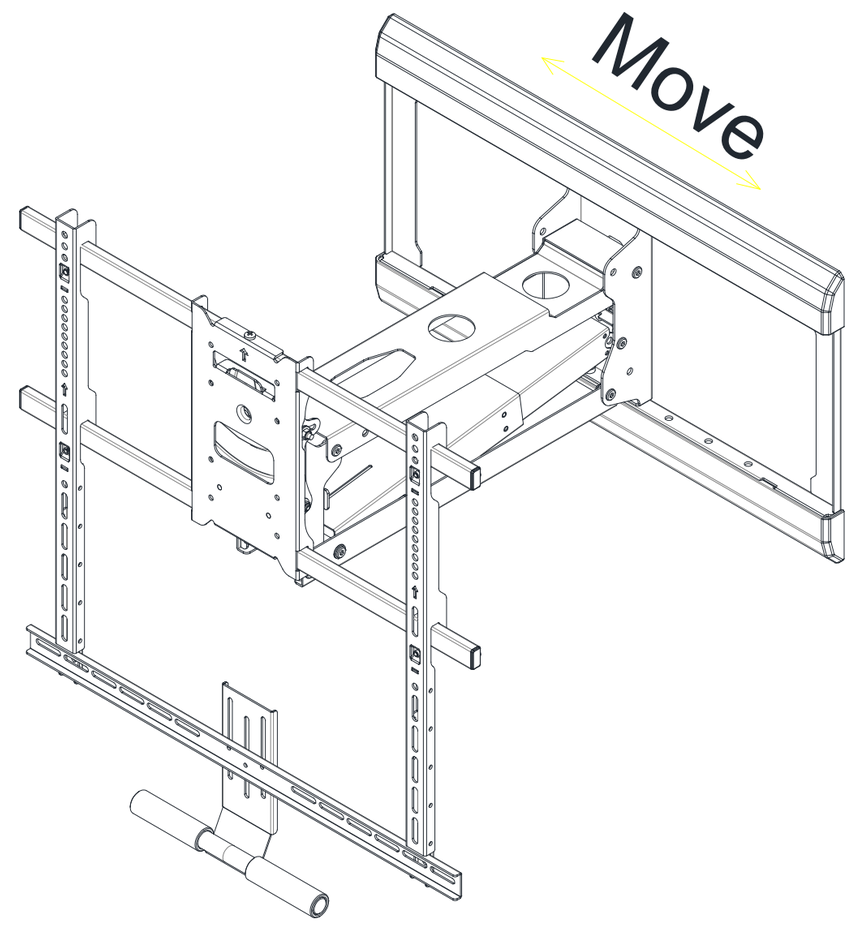

- Specifications:
- Max Load Capacity:17.6~55lbs(8~25kg)
- TV Dimension:42"-65"
- VESA Standard: 100x100~600x500mm
- Screen Level:±5°;Tilt Range:-5°/+10°;Swivel Range ±30°;